HINY HIDERS

SCRANTON PRODUCTS

COLOR SELECTION Form

Please select a color below.

NOTE: for multi-colored orders, please annotate the color / texture on submittal drawings. Standard lead times apply.

Colors Tested in Accordance with NFPA 286

Orange Peel Texture	
	Black
	Blueberry
	Paisley
	Desert Beige
	Linen
	Mocha
	Shale
	Grey
	White

Hammered Texture	
	Stainless

Colors Tested to Meet ASTM E84, Class B

Orange Peel Texture	
	Black
	Blueberry
	Paisley
	Desert Beige
	Linen
	Mocha
	Grey
	Charcoal Grey
	White

Hammered Texture	
	Stainless
	Bronze
	Nickel

Traditional Color Collection

Orange Peel Texture	
	Black†
	Paisley†
	Shale†
	Charcoal Grey†
	Grey†
	Glacier Grey†
	White†

EX Texture	
	Black†

Warm Tone Color Collection

Orange Peel Texture	
	Mahogany†
	Desert Beige†
	Mocha†
	Sandstone†
	Linen†
	Concrete†
	Sandcastle†

Bold Color Collection

Orange Peel Texture	
	Hunter Green†
	Fossil†
	Blueberry†
	Midnight†
	Burgundy†

Metallic Color Collection

Hammered Texture	
	Stainless†
	Bronze†
	Nickel†

Rotary Brushed Texture	
	Stainless†
	Bronze†
	Nickel†

EX Texture	
	Stainless†

†Standard Color Collection option does not meet NFPA 286 or ASTM E84.

HINY HIDERS OPTIONS ONLY

Hardware Options

Continuous Plastic Brackets / Shoes	
	Black
	Blueberry
	Desert Beige
	Linen
	Mocha
	Grey

New Plastic Shoe Option	
	New! Silver (Matches Clear Anodized Hardware) (Matching brackets unavailable)

Shoes	
	Plastic (specify color above)
	Stainless Steel

Bracket Types	
	Plastic (specify color above)
	Stainless Steel Stirrup
	Aluminum Stirrup
	**Continuous Stainless Steel
	**Continuous Aluminum

***Upcharges apply*
Note: Silver Plastic bracket option unavailable

CUSTOM COLORS AVAILABLE UPON REQUEST

Color matching is limited by printing process. Actual samples are available and recommended prior to color selections.

Minimum order requirements, lead-times & upcharges may all apply. Phased delivery of special orders must ship within 120 days of initial shipment.

For Hiny Hider Partitions please select a bracket color if your order was submitted with continuous plastic brackets. Some colors do not have a matching bracket/shoe color. A color must be selected from the template above or revised to a metal type. Continuous plastic brackets may be revised to aluminum stirrup or stainless steel stirrup at no charge. For continuous aluminum or continuous stainless steel up charges may apply.
Plastic shoes may be revised to stainless steel at no charge.
4/7/2023

Job Specs	Stall Mounting Style: Floor Mounted Headrail Braced	Pilaster Height: 82.75"	Material Option: Hiny Hider - Standard Color Collection option (does not meet NFPA 286 or ASTM E84) Color: Unknown

Bracket Type: 54"Continuous Stainless Steel Shoe Type: Stainless	Hinge Type: Continuous SS, Spring, 3/4" Torx (Clean Look) Pencil Slot: Yes Door Hrdw Type: Continuous Alum. (Emergency Access), .	Heat-sinc: No Fasteners: 2 1/2", 3/4" Torx (Clean Look)

Room Name: Women 125

14" AFF - 55" High Doors, 55" High Panels

Notes:

STANDARD LEAD TIME IS 5-7 BUSINESS DAYS

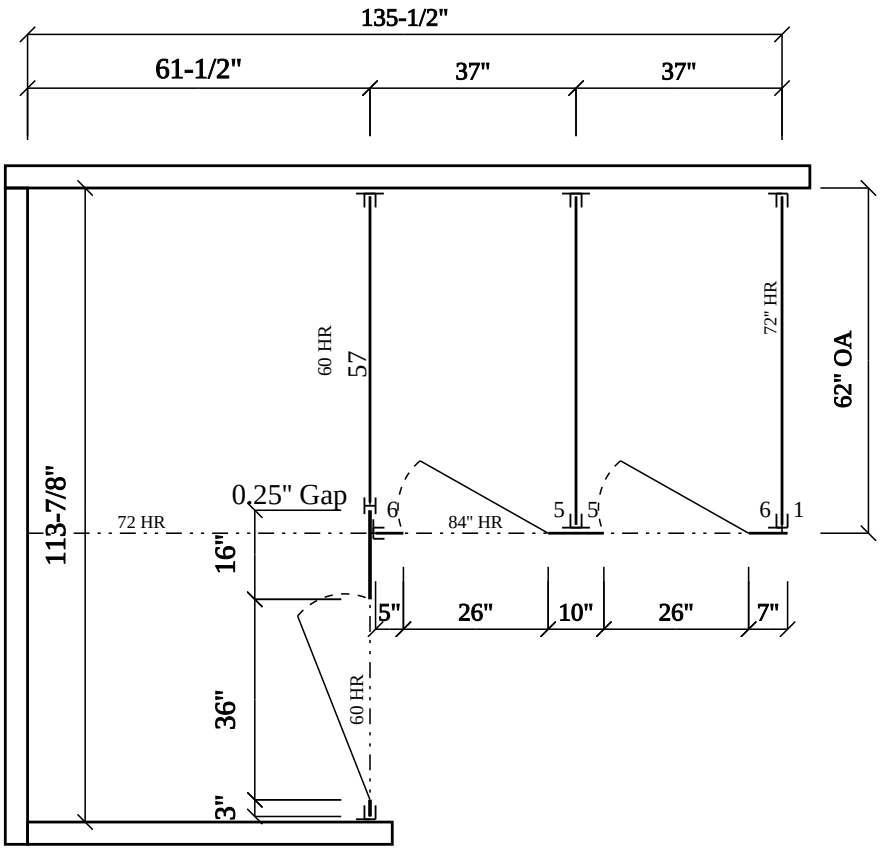

Pilaster 0.625" Gap at wall

Please Note: Pencil Slot is required to achieve Emergency Access. Your order will be placed WITH Pencil Slot unless otherwise noted.

SCRANTON PRODUCTS
HINY HIDERS
801 E COREY ST. SCRANTON, PA. 18505 Phone (570)348-0997

CUSTOMER NAME:	SCALE:	SERIAL #:	Standard Notes:
LRL INDUSTRIES (PARTITION KING)	NTS	C-1792384 - DWG C-1792389 - Room	1. Doors larger than 30" are to be set to the closed position. 2. Where pilasters and panels meet there is a 1/2" space. 3. Where pilasters and/or panels meet a wall there is a 1" space. 4. Headrail shall be supplied in 12" increments, ranging from 36" to 84". 5. Pilasters over 24" will receive a doghouse detail.
PROJECT NAME:	DATE:	REVISION #:	
Toyota of Fort Worth.	6/24/2026	SO#	
		DRAWN BY:	
		LRL INDUSTRIES .	

Job Specs	Stall Mounting Style: Floor Mounted Headrail Braced	Pilaster Height: 82.75"	Material Option: Hiny Hider - Standard Color Collection option (does not meet NFPA 286 or ASTM E84) Color: Unknown

Bracket Type: 54"Continuous Stainless Steel Shoe Type: Stainless	Hinge Type: Continuous SS, Spring, 3/4" Torx (Clean Look) Pencil Slot: Yes Door Hrdw Type: Continuous Alum. (Emergency Access), .	Heat-sinc: No Fasteners: 2 1/2", 3/4" Torx (Clean Look)

Room Name: Men 124

14" AFF - 55" High Doors, 55" High Panels

Notes:

STANDARD LEAD TIME IS 5-7 BUSINESS DAYS

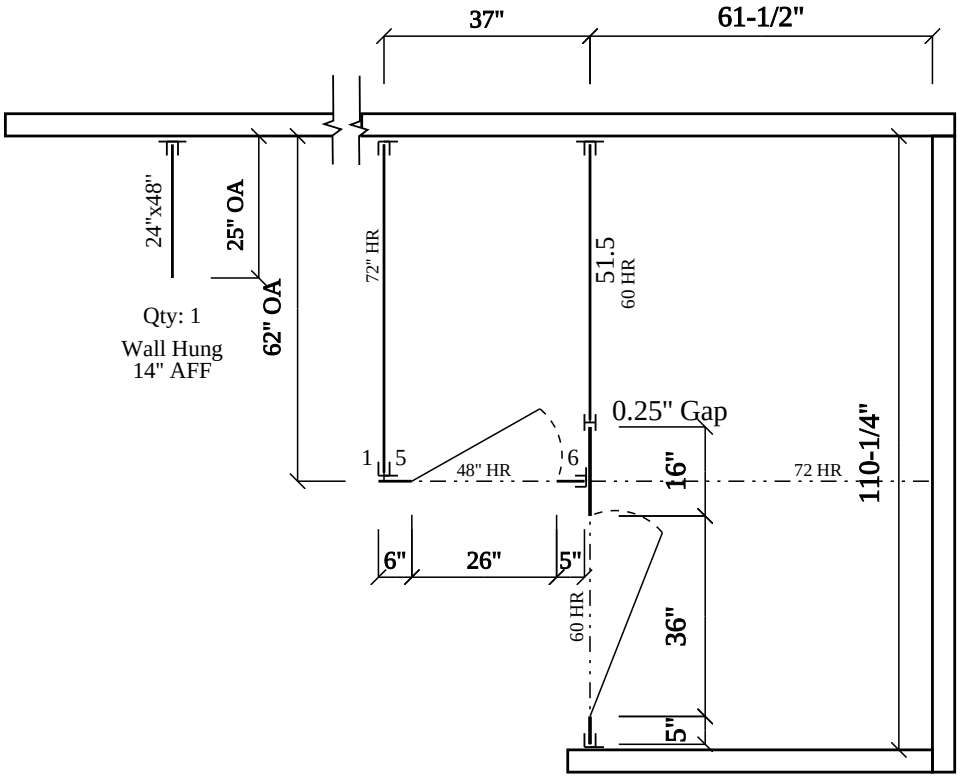

Pilaster 0.5" Gap at wall

Please Note: Pencil Slot is required to achieve Emergency Access. Your order will be placed WITH Pencil Slot unless otherwise noted.

SCRANTON PRODUCTS
HINY HIDERS
801 E COREY ST. SCRANTON, PA. 18505 Phone (570)348-0997

CUSTOMER NAME:	SCALE:	SERIAL #:
LRL INDUSTRIES (PARTITION KING)	NTS	C-1792384 - DWG C-1792399 - Room
PROJECT NAME:	DATE:	REVISION #:
Toyota of Fort Worth.	6/24/2026	SO#
		DRAWN BY:
		LRL INDUSTRIES .

Standard Notes:

1. Doors larger than 30" are to be set to the closed position.
2. Where pilasters and panels meet there is a 1/2" space.
3. Where pilasters and/or panels meet a wall there is a 1" space.
4. Headrail shall be supplied in 12" increments, ranging from 36" to 84".
5. Pilasters over 24" will receive a doghouse detail.

Job Specs	Stall Mounting Style: Floor Mounted Headrail Braced	Pilaster Height: 82.75"	Material Option: Hiny Hider - Standard Color Collection option (does not meet NFPA 286 or ASTM E84) Color: Unknown

Bracket Type: 54"Continuous Stainless Steel Shoe Type: Stainless	Hinge Type: Continuous SS, Spring, 3/4" Torx (Clean Look) Pencil Slot: Yes Door Hrdw Type: Continuous Alum. (Emergency Access), .	Heat-sinc: No Fasteners: 2 1/2", 3/4" Torx (Clean Look)

Room Name: Women 206

14" AFF - 55" High Doors, 55" High Panels

Notes:

STANDARD LEAD TIME IS 5-7 BUSINESS DAYS

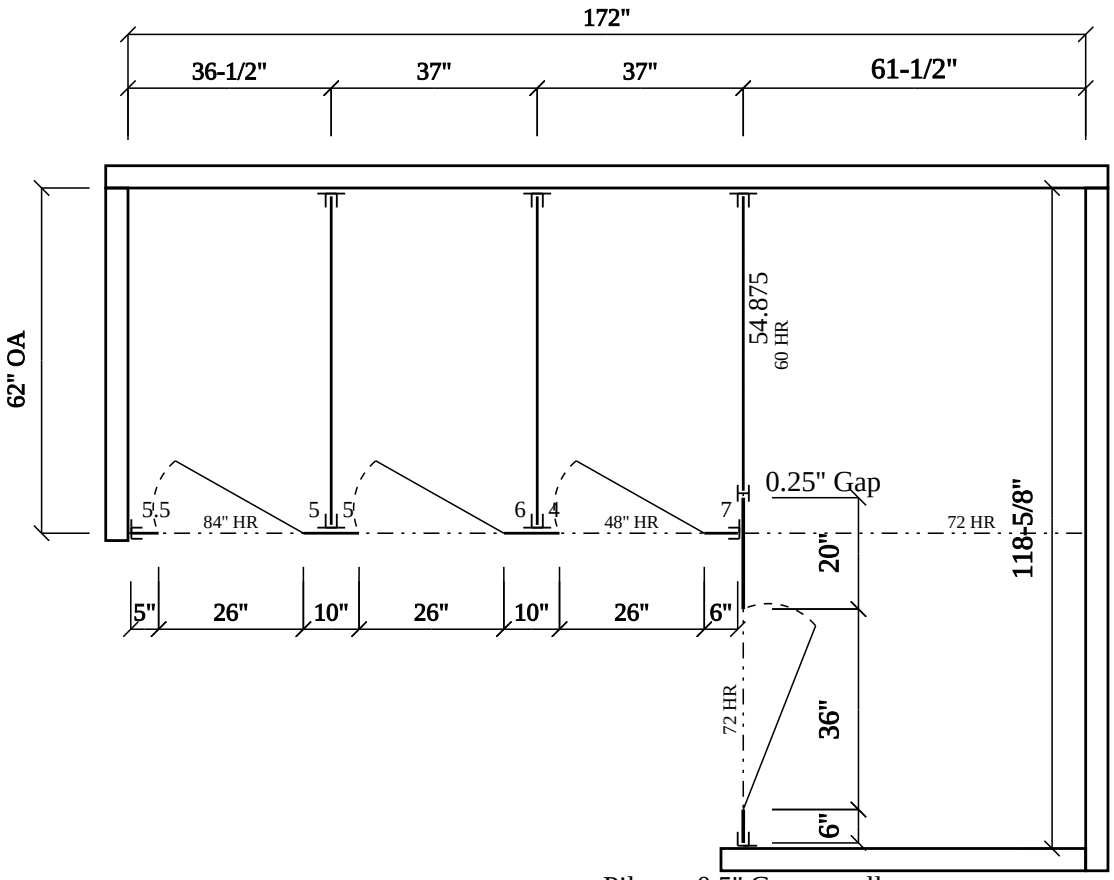

Pilaster 0.5" Gap at wall

Please Note: Pencil Slot is required to achieve Emergency Access. Your order will be placed WITH Pencil Slot unless otherwise noted.

SCRANTON PRODUCTS | HINY HIDERS

801 E COREY ST. SCRANTON, PA. 18505 Phone (570)348-0997

CUSTOMER NAME: LRL INDUSTRIES (PARTITION KING)	SCALE: NTS	SERIAL #: C-1792384 - DWG C-1792409 - Room	Standard Notes:
PROJECT NAME: Toyota of Fort Worth.	DATE: 6/24/2026	REVISION #: SO# DRAWN BY: LRL INDUSTRIES .	1. Doors larger than 30" are to be set to the closed position. 2. Where pilasters and panels meet there is a 1/2" space. 3. Where pilasters and/or panels meet a wall there is a 1" space. 4. Headrail shall be supplied in 12" increments, ranging from 36" to 84". 5. Pilasters over 24" will receive a doghouse detail.

Job Specs	Stall Mounting Style: Floor Mounted Headrail Braced	Pilaster Height: 82.75"	Material Option: Hiny Hider - Standard Color Collection option (does not meet NFPA 286 or ASTM E84) Color: Unknown

Bracket Type: 54"Continuous Stainless Steel Shoe Type: Stainless	Hinge Type: Continuous SS, Spring, 3/4" Torx (Clean Look) Pencil Slot: Yes Door Hrdw Type: Continuous Alum. (Emergency Access), .	Heat-sinc: No Fasteners: 2 1/2", 3/4" Torx (Clean Look)

Room Name: Men 205

14" AFF - 55" High Doors, 55" High Panels

Notes:

STANDARD LEAD TIME IS 5-7 BUSINESS DAYS

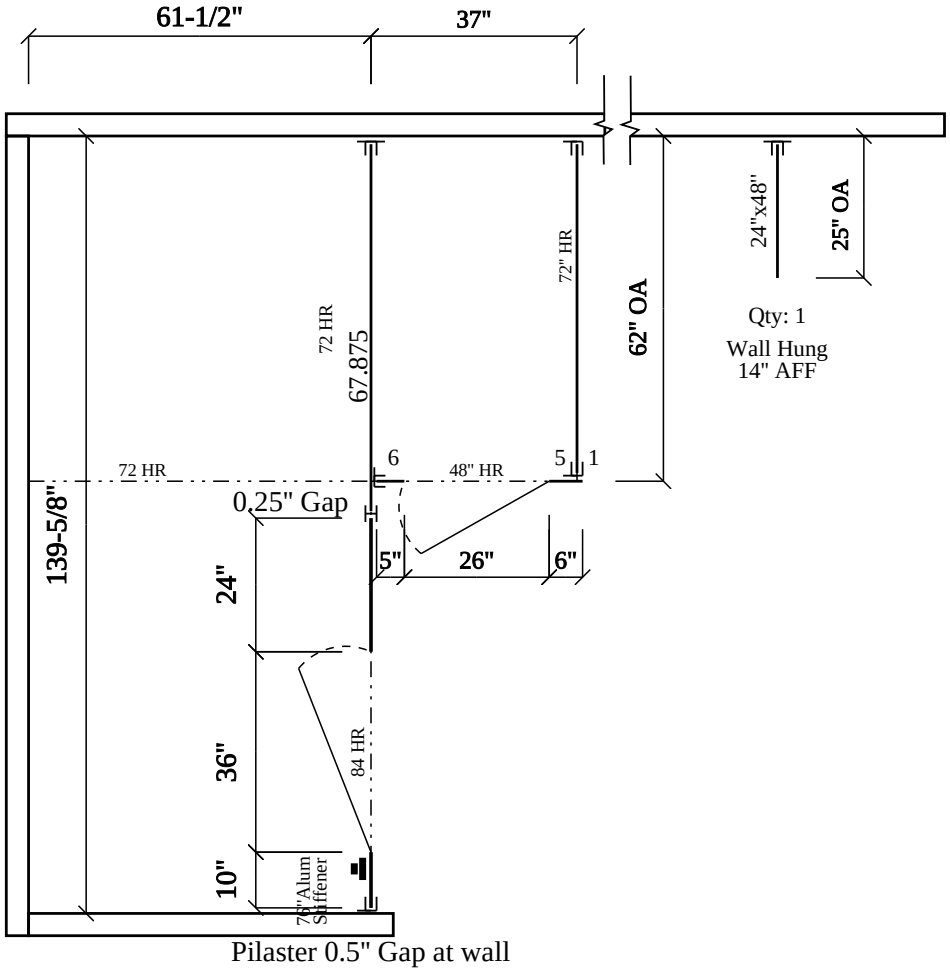

Please Note: Pencil Slot is required to achieve Emergency Access. Your order will be placed WITH Pencil Slot unless otherwise noted.

SCRANTON PRODUCTS | HINY HIDERS

801 E COREY ST. SCRANTON, PA. 18505 Phone (570)348-0997

CUSTOMER NAME: LRL INDUSTRIES (PARTITION KING)	SCALE: NTS	SERIAL #: C-1792384 - DWG C-1792420 - Room	Standard Notes:
PROJECT NAME: Toyota of Fort Worth.	DATE: 6/24/2026	REVISION #: SO# DRAWN BY: LRL INDUSTRIES .	1. Doors larger than 30" are to be set to the closed position. 2. Where pilasters and panels meet there is a 1/2" space. 3. Where pilasters and/or panels meet a wall there is a 1" space. 4. Headrail shall be supplied in 12" increments, ranging from 36" to 84". 5. Pilasters over 24" will receive a doghouse detail.

Job Specs	Stall Mounting Style: Floor Mounted Headrail Braced	Pilaster Height: 82.75"	Material Option: Hiny Hider - Standard Color Collection option (does not meet NFPA 286 or ASTM E84) Color: Unknown

Bracket Type: 54"Continuous Stainless Steel Shoe Type: Stainless	Hinge Type: Continuous SS, Spring, 3/4" Torx (Clean Look) Pencil Slot: Yes Door Hrdw Type: Continuous Alum. (Emergency Access), .	Heat-sinc: No Fasteners: 2 1/2", 3/4" Torx (Clean Look)

Room Name: Women Tech

14" AFF - 55" High Doors, 55" High Panels

Notes:

STANDARD LEAD TIME IS 5-7 BUSINESS DAYS

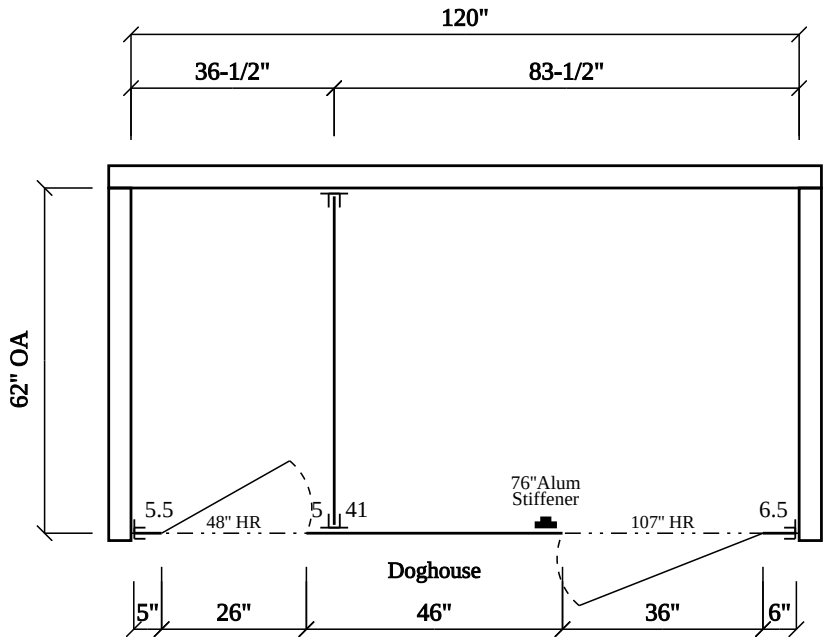

Please Note: Pencil Slot is required to achieve Emergency Access. Your order will be placed WITH Pencil Slot unless otherwise noted.

SCRANTON PRODUCTS
HINY HIDERS
801 E COREY ST. SCRANTON, PA. 18505 Phone (570)348-0997

CUSTOMER NAME: LRL INDUSTRIES (PARTITION KING)	SCALE: NTS	SERIAL #: C-1792384 - DWG C-1792429 - Room	Standard Notes:
PROJECT NAME: Toyota of Fort Worth.	DATE: 6/24/2026	REVISION #: SO# DRAWN BY: LRL INDUSTRIES .	1. Doors larger than 30" are to be set to the closed position. 2. Where pilasters and panels meet there is a 1/2" space. 3. Where pilasters and/or panels meet a wall there is a 1" space. 4. Headrail shall be supplied in 12" increments, ranging from 36" to 84". 5. Pilasters over 24" will receive a doghouse detail.

Job Specs	Stall Mounting Style: Floor Mounted Headrail Braced	Pilaster Height: 82.75"	Material Option: Hiny Hider - Standard Color Collection option (does not meet NFPA 286 or ASTM E84) Color: Unknown

Bracket Type: 54"Continuous Stainless Steel Shoe Type: Stainless	Hinge Type: Continuous SS, Spring, 3/4" Torx (Clean Look) Pencil Slot: Yes Door Hrdw Type: Continuous Alum. (Emergency Access), .	Heat-sinc: No Fasteners: 2 1/2", 3/4" Torx (Clean Look)

Room Name: Men Tech

14" AFF - 55" High Doors, 55" High Panels

Notes:

STANDARD LEAD TIME IS 5-7 BUSINESS DAYS

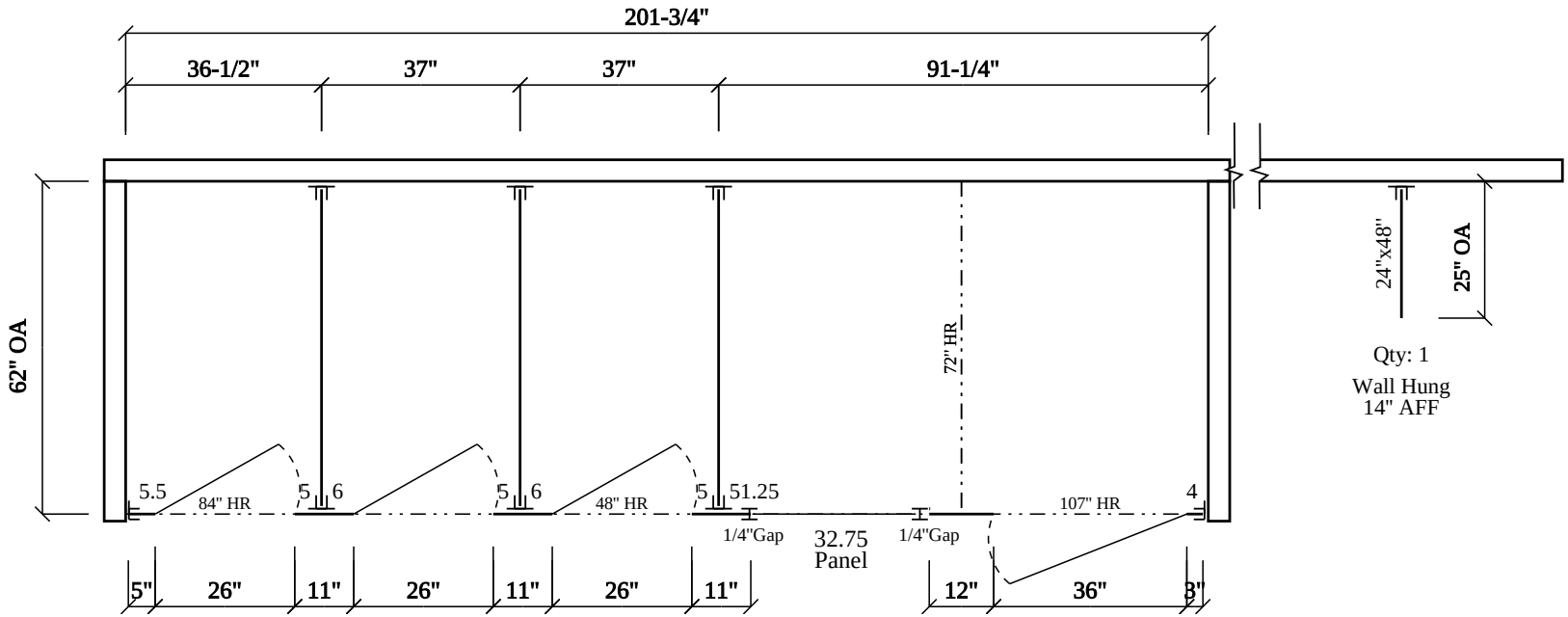

Please Note: Pencil Slot is required to achieve Emergency Access. Your order will be placed WITH Pencil Slot unless otherwise noted.

SCRANTON PRODUCTS
HINY HIDERS
801 E COREY ST. SCRANTON, PA. 18505 Phone (570)348-0997

CUSTOMER NAME: LRL INDUSTRIES (PARTITION KING)	SCALE: NTS	SERIAL #: C-1792384 - DWG C-1792452 - Room	Standard Notes:
PROJECT NAME: Toyota of Fort Worth.	DATE: 6/24/2026	REVISION #: SO# DRAWN BY: LRL INDUSTRIES .	1. Doors larger than 30" are to be set to the closed position. 2. Where pilasters and panels meet there is a 1/2" space. 3. Where pilasters and/or panels meet a wall there is a 1" space. 4. Headrail shall be supplied in 12" increments, ranging from 36" to 84". 5. Pilasters over 24" will receive a doghouse detail.

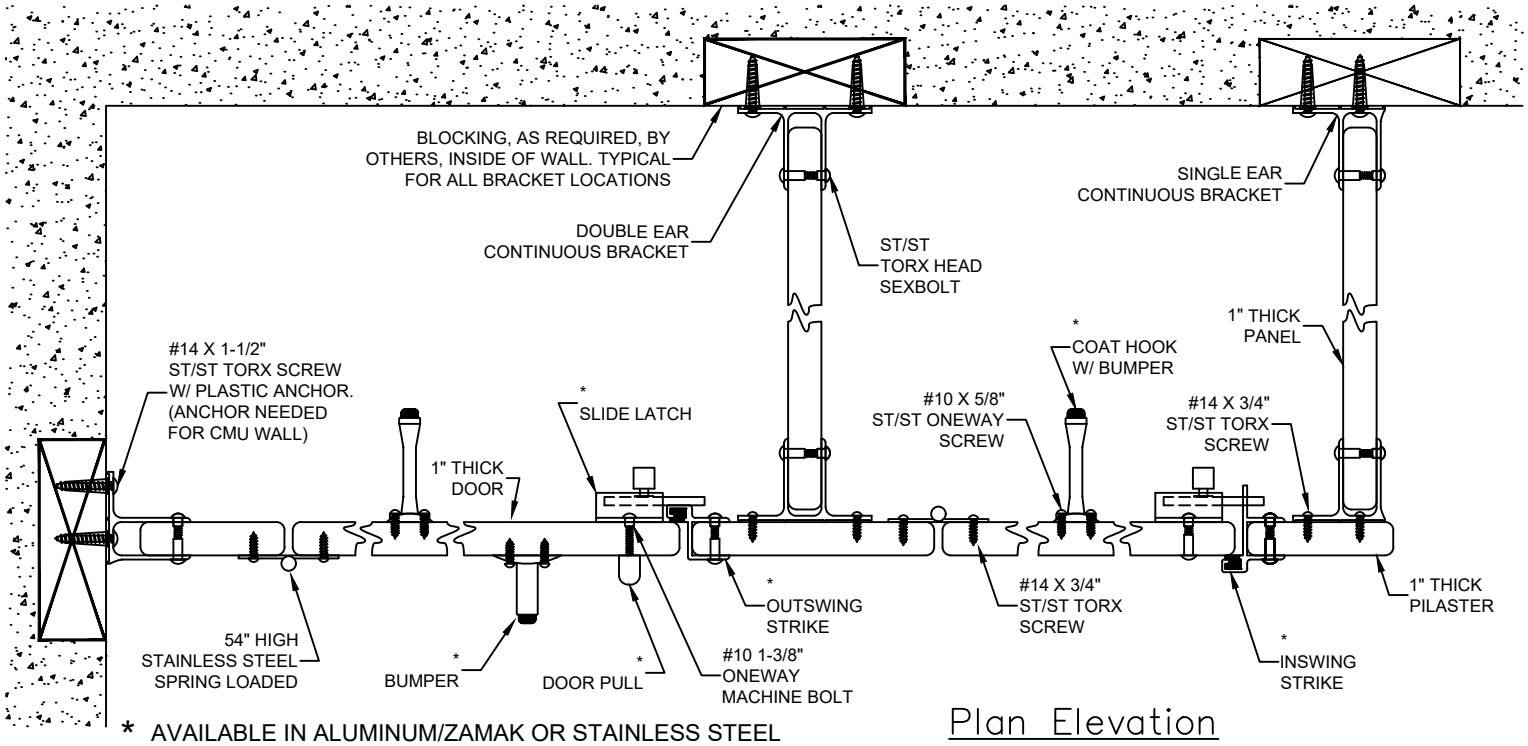

* AVAILABLE IN ALUMINUM/ZAMAK OR STAINLESS STEEL

Plan Elevation

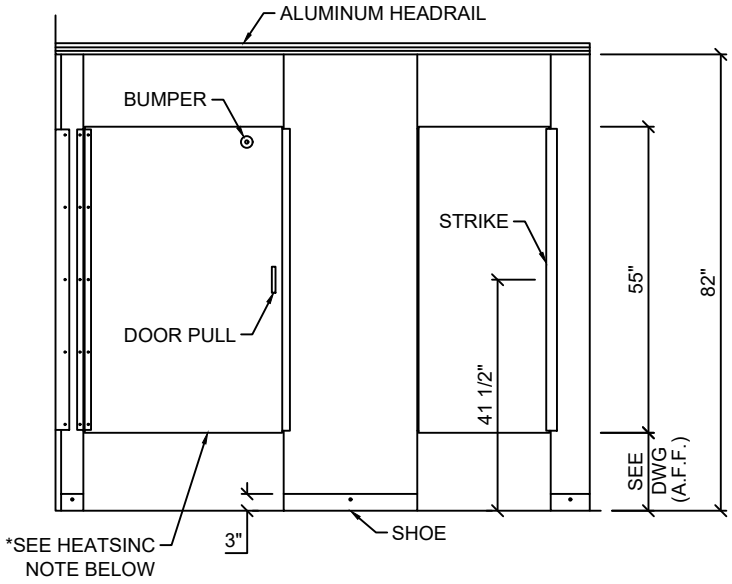

Front Elevation

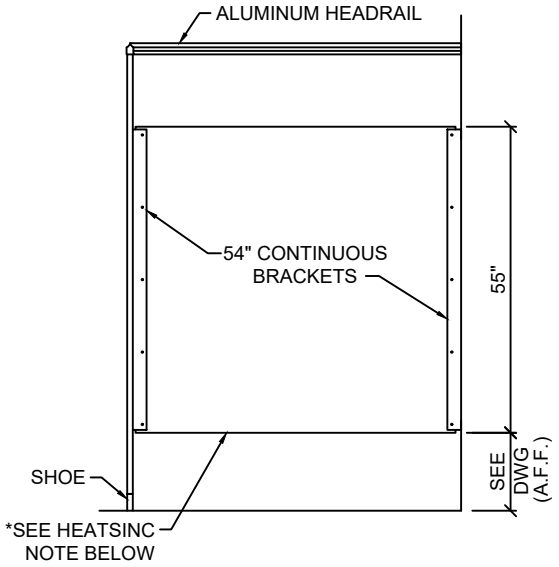

Side Elevation

SCRANTON PRODUCTS

HINY HIDERS

801 E COREY ST. SCRANTON, PA. 18505 Phone (570)348-0997

STANDARD ELEVATIONS

(Drawings are not to scale)

*Floor Mounted Overhead Braced

*54" Stainless Steel Spring Loaded Hinge (closed only)

*Continuous Brackets (Aluminum, Stainless Steel, or Plastic Available)

NOTE: Hinge is spring loaded tension, H.C. & Standard doors to set return to "closed" (0°).

Note: "Job-Specific Specifications" for all orders are located on the top of the shop drawing layouts.

** HEATSINC NOTE: Heatsinc is to be placed on the bottom of the panels & doors. (If specified)*

Details

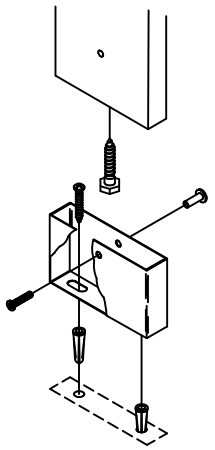

Floor Mount

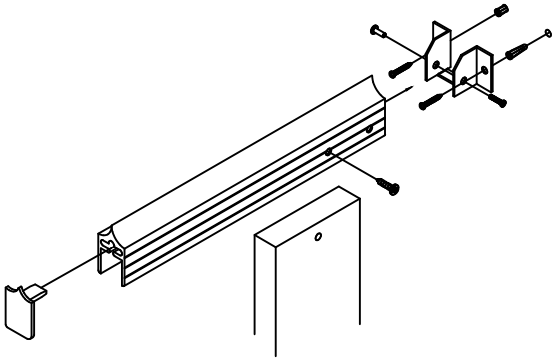

Headrail Brace

PENCIL SLOT DETAILING ALLOWS THE COMPARTMENT TO BE OPENED FROM THE OUTSIDE OF THE STALL BY MANUALY MOVING THE SLIDE BAR WITH A PENCIL OR OTHER OBJECT LESS THAN $\frac{1}{4}$" IN DIAMETER.

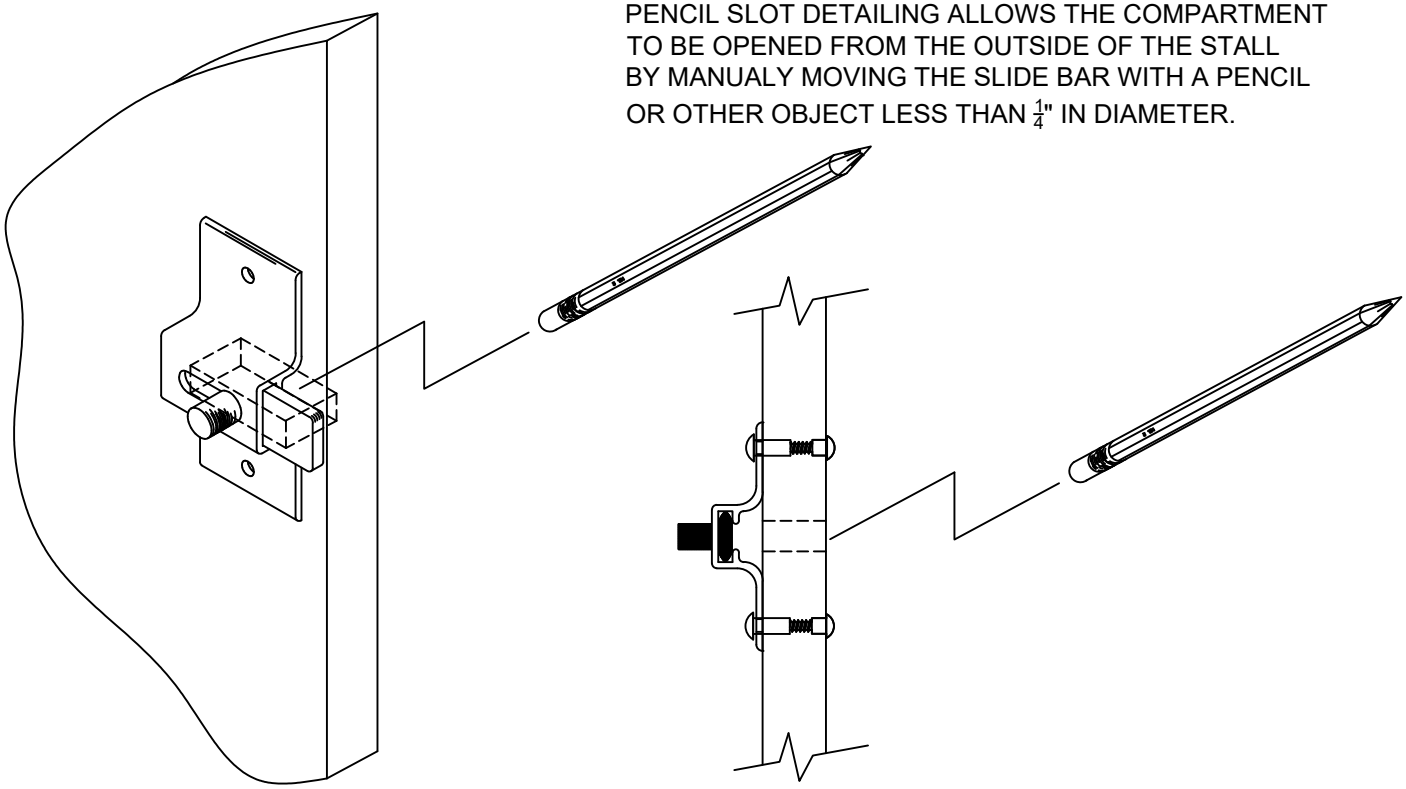

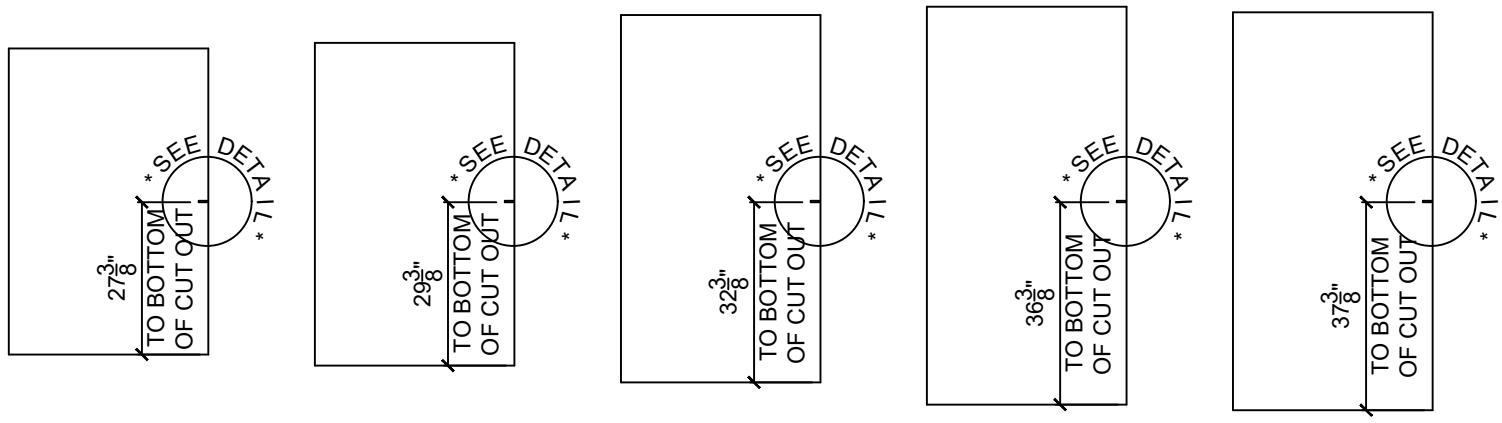

14"A.F.F. 12"A.F.F. 9"A.F.F. 5"A.F.F. 4"A.F.F.

SEE FLOOR PLAN FOR ABOVE FINISH FLOOR (A.F.F.) HEIGHT

STANDARD ELEVATIONS
(Drawings are not to scale)
PENCIL SLOT DETAILING IS AVAILABLE WITH ALL HARDWARE TO ALLOW FOR EMERGENCY ACCESS.

Note: **"Job-Specific Specifications" for all orders are located on the top of the shop drawing layouts.**

** HEATSINC NOTE: Heatsinc is to be placed on the bottom of the panels & doors. (If specified)*

EMERGENCY SLOT DETAIL

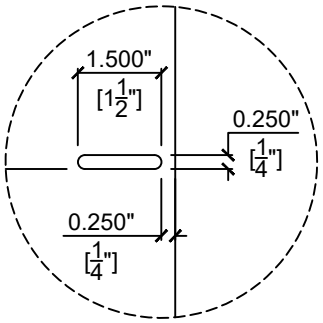

SCRANTON PRODUCTS | HINY HIDERS
801 E COREY ST. SCRANTON, PA. 18505 Phone (570)348-0997

Wall Hung Screen Elevation with Continuous Bracket

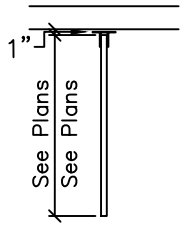

Plan View

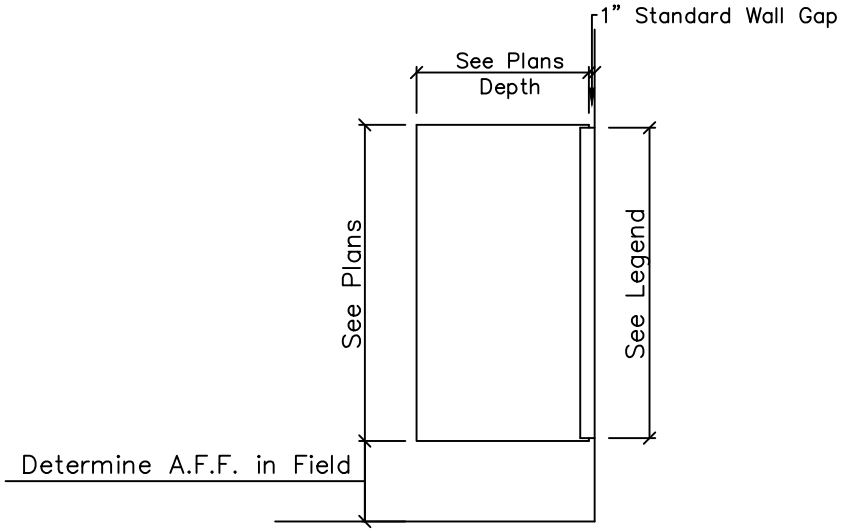

Side View

SINGLE & DOUBLE EAR BRACKET LEGEND (Note: Due to some limited bracket sizes, field trimming may be required)
Continuous Aluminum – Available Sizes: 41"; 47"; 54"; 68"; & 71"
Continuous Stainless Steel – Available Sizes: 41"; 54"; & 71" (41" supplied for 48" high screens)
Continuous Plastic – Available Sizes: 41"; & 54" (54" supplied for 48" high screens)

SCRANTON PRODUCTS | HINY HIDERS

801 E COREY ST. SCRANTON, PA. 18505 Phone (570)348-0997

STANDARD ELEVATIONS

(Drawings are not to scale)

*Urinal Screens/ Privacy Screens

*Continuous Brackets (See legend for available sizes)

Note: **"Job-Specific Specifications" for all orders are located on the top of the shop drawing layouts.**

** HEATSINC NOTE: Heatsinc is to be placed on the bottom of the panels & doors. (If specified)*

NOTES:

1. SEE PLANS FOR SCREEN DEPTH & HEIGHT. SCREEN WILL BE PROVIDED AS QUOTED/DRAWN UNLESS OTHERWISE DIRECTED.
2. ANY SCREEN OVER 30" IS RECOMMENDED TO HAVE A FLOOR SUPPORTED PILASTER FOR STABILITY.

CUSTOMER NOTES: